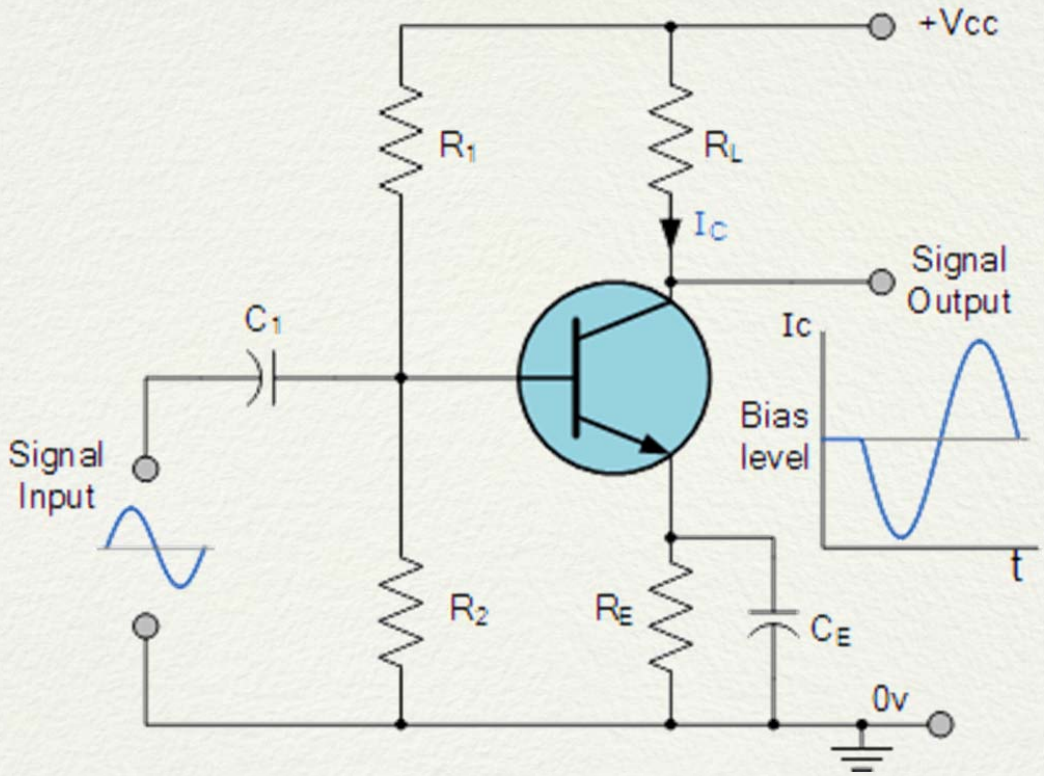

Amplifier Shootout

Winter 2016

Chicago

While OEM infotainment systems are better than ever, the audio playback usually is underwhelming, and leaves a lot to be desired. This shouldn't come as a surprise, given the anemic amplifiers, and inexpensive speakers automobile manufactures use – even in their "Premium" systems. Digital Signal Processors and OEM integration is making it easier than ever to get a high quality signal to the aftermarket amplifiers. As High Resolution source units become more commonplace, it makes sense the rest of the system should be able to reveal the more finite details for a more realistic playback experience.

My parents are both accomplished musicians, and they made sure my brother and I began piano lessons at an early age. My dad is an electrical engineer, and there was naturally a bit of monkey-see-monkey-do whenever he was repairing or tinkering with various projects. I was fascinated with electronics, especially those that had anything to do with audio. I read Car Stereo Review, Car Audio, and Autosound 2000 Tech Briefs, which included Richard Clark's Amp Challenge. In the description of Dick's test setup, he will adjust the frequency response of one amplifier to match the other. This alone demonstrates that Richard acknowledges that amplifiers DO sound differently, and given certain parameters, can be made to be statistically identical. I submit there is more to an amplifier's signature sound than frequency response. Human psychoacoustics are capable of processing amplitude and time / phase relationships that exceed the measurement capabilities of an RTA. I recognize modern measuring and test equipment is significantly more advanced since the inception of The Amp Challenge, but that discussion is beyond the scope of this endeavor. I'll conclude that it would be fascinating to associate perceived sound cues with a particular performance metric.

Despite CEA 2006 Certification parameters, the possibility for manufacturers and their marketing department to perform a bit of "specsmanship" exists. This can highlight their products particular strengths and mask the weaknesses. Additionally, how can we expect an unbiased apples-to-apples comparison, when the products weren't tested under the same conditions, by the same test equipment and personnel? There will be a difference between the manufacturers "Specifications", and real world "Measurements", but let's assume that the theoretical *is* possible –the same lab measured *all* amplifiers. What do the measurements reveal about an amplifiers sonic characteristic? What measurements can be correlated to perceived soundstage depth, width, image placement and focus? Could some of the measurements be missing that would be more telling?

I've always preferred the empirical approach to confirm any audible differences between equipment. In college, I built an A/B/X remote controlled switch that has the ability to toggle in less than 0.5 seconds using gold plated relays, and high quality connections. It's the perfect tool to evaluate up to three amplifiers at once. Proper level matching is essential. We used a test tone and digital multi-meter. I lack the instrumentation necessary to perform in-depth measurements of power, distortion, Signal-to-Noise, etc. I'm purely concerned with the audible performance.

Admittedly, I've got an obsession for amplifiers. I've put in considerable effort to learn the HOW and WHY a pile of electronics can make music. It's uncouth to brag, and there's not really a formal education that yields some "Amplifier Engineering Degree" or certification. At most, it's a passion gone wild. If you cannot hear the differences, or your system is incapable of revealing these differences to you, fine, but it is absolutely incorrect to say there is "no difference". That's not possible! Two dissimilar circuits cannot measure, and do not sound identical. The more appropriate question is: "What is the audible threshold for these differences?" I submit that the human hearing can be far more acute than most give credit for.

I'm fortunate to have several friends who trust me with their multi-thousand dollar amplifiers to lend them to me for the purposes of my enjoyment and musings. A few points to remember while reading the following:

- These results are a consensus. I'm open to constructive criticism and will gladly engage in discourse related to the subject. That said, spare me the derogatory remarks if your favorite amplifier wasn't included, or didn't place favorably.

- All 18 listeners are unaffiliated with any audio equipment manufacturer. We're unbiased. The group of 18 listeners was intentionally diverse. Half are females - 5 are mothers. A dozen have formal musical training. Only 4 were Autosound enthusiasts.

- This was a way to pass the cold Chicago winter while indoors, listening to well-recorded material. While this review is without measurements, every effort was used to control the variables, and form a consensus.

The setup is straight forward, using a Cascade Audio Engineering 45 amp 12VDC power supply, feeding a 15 Farad Phoenix Gold CAP. Each amplifier is protected by a Stinger 80 Amp circuit breaker, which also allows for faster and safer amplifier changes. The source units are from Atoll. Their MS100 Music Server is optically connected to their HD120 preamp. Black Cat RedLevel interconnects and Ghostwire speaker cables were used. A Fluke 117 Digital Multi-Meter was used to set gain controls and equalize outputs. Listening levels were kept reasonable, avoiding clipping any of the amplifiers. I've been a long time owner of Magnepan speakers. They're highly regarded, consistently reviewed as being "reference level". My current set is the MG3.6R. Their estimated voltage sensitivity is on the low side, at 83.5dB(B)/2.83V/m, and is more demanding of the amplifiers to drive the speakers to useful levels. Here are the closing remarks from the Stereophile review on them:

"Taken on its own, however, the Magnepan Magneplanar MG3.6/R is a sensational speaker, and, at $3750/pair, very reasonably priced. In some respects it's the best speaker I've heard, period. Even in the areas where it's perhaps not the very best, it's awfully close—even when the very best is several times more expensive. Some

speakers I admire, some I like...the Magnepan MG3.6/R, I think I'll keep. Very highly recommended!"

The speaker's impedance (fig.1) approximates a resistive load of around 4 ohms over much of the audioband. However, there is a slight magnitude peak centered at 1.6kHz, due to the crossover between the ribbon and the midrange diaphragm. The minimum value is 3.3 ohms at 10kHz, which is not going to be problem for any good amplifier to drive, while the increasingly positive electrical phase angle at the top of the audioband is, I assume, due to the residual inductance of the ribbon driver. There is a small wrinkle in the trace between 50Hz and 60Hz, which is probably due to the tuning of the woofer diaphragm.

Read more at http://www.stereophile.com/content/magnepan-magneplanar-mg36r-loudspeaker-measurements#X437pbKrPgqArIxe.99

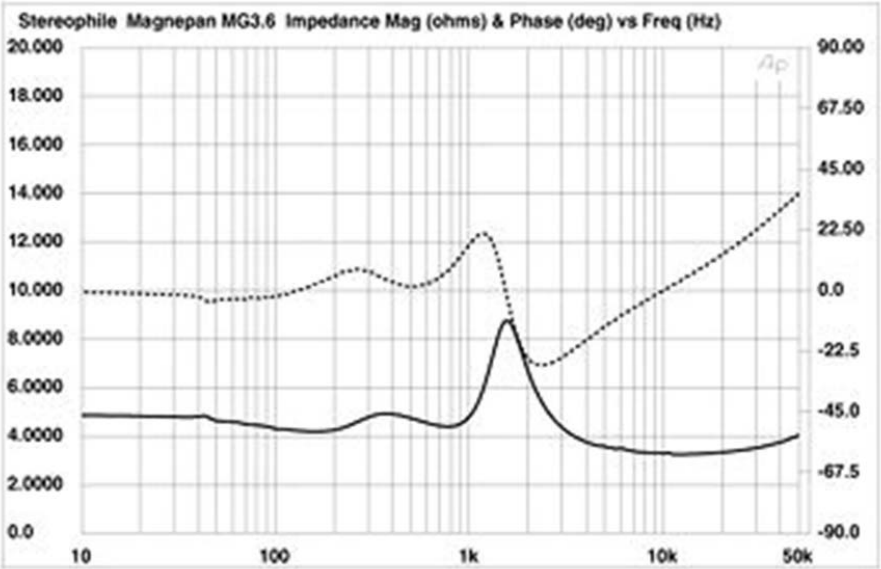

Music

- Michael Bublé - "You'll Never Find Another Love Like Mine (with Laura Pausini)" - Caught in the Act
- Chris Botti – "Con Te Partiro" – Chris Botti In Boston
- John Mayer – "Neon" – Inside Wants Out
- Maroon 5 – "Sex and Candy" – V
- Brian Culbertson – "Been Around the World" – Funk!
- Alanis Morissette – "Your House (Hidden Track)" – Jagged Little Pill: Acoustic
- Rebecca Pidgeon – "Spanish Harlem" – The Raven
- Dave Matthews – "Some Devil" –Some Devil
- Rage Against the Machine – "Know Your Enemy (Remastered)" – XX

The Amplifiers

- Adcom GFA-4702 (modified)
- Arc Audio 4200SE (modified)
- Audison Trenta (modified)
- Audison Voce Due
- Celestra VA210
- Celestra RA475x
- DR Coustic DR510
- Genesis Class A Monoblocks
- JL Audio HD600/4
- Linear Power LP2250
- Luxman CM-2100 (modified)
- Mosconi A Class
- Phoenix Gold MS-2250 (modified)
- Sinfoni Presto Ad-lib
- Sinfoni Prestigio (modified and unmodified)
- Sinfoni 60.1HD (modified)
- SoundDigital GaN SD300.2D
- Zapco Z-400.2LX

RESULTS

We decided long ago that we would NOT be ranking the amplifiers from first to last because each listener had a slightly different final ranking of the 19 amplifiers. With that being said, we amicably devised a 4-tier system for the final rankings, and grouped them according to similar performance. One of the criteria we felt necessary to be included in Tier 1 was the ability to make the speakers vanish. The presentation must be effortless. These Tier 1 amplifiers *could be a direct replacement* for the best home audio amplifiers. Simply: the best of the best.

Tier 4 - Below audiophile expectations
Tier 3 - Fair and would meet some audiophile expectations
Tier 2 – Strong performer, and would exceed many audiophile expectations
Tier 1 - REFERENCE LEVEL

Tier 4

Linear Power 2250 –$2350

An American legend continues on with Ray Rayfield's latest designs. He is a staunch supporter of soundoff competitions, and several of vehicles using Linear Power did favorably at this year's Finals in Louisville, Kentucky. The success can be attributed to mitigating or eliminating noise and unshakable reliability. Linear Power amplifiers build upon the old-school overkill philosophy for the ability to produce gobs of clean power. I noticed that after several hours of demanding operation, the LP2250 barely reached what I'd call "warm" to the touch. Sure, three sides of the chassis are heatsink, but I was surprised how little heat was given off, compared to the other amplifiers. There are a few notable flaws I noticed that prevent me from giving these amplifiers higher praise. For starters, the power input terminals aren't closed. The terminals are essentially a pipe with a setscrew perpendicular to the opening (see pic below). As power wire is known to fray into little bits, this is a short-circuit and failure waiting to happen! Additionally, the gain pot isn't aligned with the hole, making adjustments cumbersome. Overall we felt the sound was uninvolving, especially the lackluster upper frequencies. The soundstage was narrow and shallow. Image focus wasn't on par with the other amplifiers. We were expecting much more, and this amplifier left us underwhelmed, and uninvolved.

<u>Tier 4</u>

JL Audio HD600/4 - $800

On their website, JL Audio states the HD600/4 is an amplifier capable of "…delivering huge dynamics with pristine resolution. From a pure sound quality perspective, we invite you to compare the real-world, in-car performance of this amplifier to any other amplifier on the market, of any type, at any price." Bold words! I found some to be true – this amplifier certainly has 'huge dynamics' that no other amplifier we listened to came close, especially at low output levels. This amplifier is quiet, and provided a clear presentation, if sterile and clinical sounding, typical of the Class D stigma. Compared to the other amplifiers, the soundstage was narrow and shallow. The artists emotion was lost in the delivery.

Audison Voce Due - $1100

Without question, this is one of the best looking amplifiers I have put my eyes on. It gets top marks for fit and finish, and sensible connections. There's no question about its output power, as it will put a smile on your face when you roll the volume knob clockwise. Despite being a Class A/B amplifier, we were surprised that it delivered a rather "cold", and uninvolving presentation. Soundstage dimensions were on par with the other amps in this tier.

TIER 3

Arc Audio SE4200 (w/ factory upgrades) - $1,600
Robert Zeff founded Zapco, and was the head engineer. He sold Zapco to focus on Nicola engineering. Demetrious Karabinis left Zapco, and founded Arc Audio. When he left, he handpicked a few more Zapco guys to join his new endeavor. Combined with Zeff, they designed the Signature Edition, which Zeff refers to his "finest amplifiers to date". These amplifiers incorporate balanced inputs, audiophile grade components, and available factory "Competition Upgrades" – which this reviewed sample SE4200 features. Arc Audio is continuously upgrading and refining these modifications, and this amp is about 5 years old. I used the RJ45 balanced inputs, which bypasses a coupling capacitor that's in series with the RCA jacks, improving fidelity. After dealing with the cumbersome, and annoyingly oversensitive gain pots, the upper frequencies had a hint of graininess. We also felt this amplifier had a distinct strong upper midrange presence by comparison. Soundstage dimensions were average.

Tru Technology Tungsten - $900
This is their brand new design, which will replace the dated Steel series. Those that have been into car audio for a while will note the similar heatsink design as the Phoenix Gold MS and MPS amplifiers, though the Tungsten is smaller than the PG. Fit and finish is very nice. This amplifier doesn't discriminate, and reproduced all genres of music equally well. The soundstage is wider and deeper than average, with good focus. Overall, it is a good value. The presentation was described as being "neutral", in every way. Even after extended operation, the amplifier never got warm to the touch.

Tier 2

Mosconi A Class

This amplifier features a Zero Negative Feedback configuration, sliding bias design. While we found the fit and finish very nice, especially with the red glowing LEDs, the remote turn-on terminal appears as an afterthought. The amplifier sounds better with the "Direct Drive" toggled ON. The soundstage opens up more, and the upper frequencies are smoother. We were pleasantly surprised at how lush sounding this amplifier can be, especially with more complex and demanding music.

Celestra RA475x - $1800 Don't be fooled by the physical size of this amplifier. The fans on this Zero Negative Feedback Class A/B design allow for decreased heatsink dimensions, similar to typical Class D amps. Only under extreme playback levels were the fans audible. The only notable quirks from an external perspective were the incorrect channel labels, and unconventional terminal layout. There are two sets of power terminals, and the corresponding audio terminals are on the opposite sides of their associated power terminals. The speaker positive and negative are mislabeled on the amplifier, but correct in the manual. It's my understanding this is being addressed now. Any of the aforementioned gripes are forgotten when enjoying this amplifier's sweet, and very smooth sound. Soundstage dimensions were above average, with excellent placement and focus.

Tier 2

Sinfoni Presto Ad-lib - $2500
Typical of Sinfoni, this amplifier has flawless fit and finish. With a low profile, and without fans, this amp would make for easy installation in the cabin, perhaps under a seat. Soundstage dimensions were above average, with excellent placement and focus. Tonality was silky smooth, and by comparison, has a more forward upper frequency presence than the Celestra RA475x.

Tier 1

Zapco Z400.2LX

One of the founding car audio companies, starting in 1974, Zapco has always been highly regarded. The LX amplifier circuits are the culmination of more than 40 years, using top shelf components like Elna Silmic caps, audiophile grade OpAmps, and an ultra high speed regulated power supply. They've jettisoned fidelity robbing circuitry like crossovers for a shortened signal path. The fit and finish of the massive heatsink is fantastic. It earns top marks for having crystal clear transparency, and a very wide and deep soundstage. Dynamics were seemingly limitless. This is among the highest value of the group of amplifiers. Stunning!

Tier 1

Celestra VA210 - $3800

Sublime. This is the amplifier that makes focusing on reviewing equipment difficult, because it's projects the artist's emotion, which is impossible to ignore. The hair stands up on your arms. Your mouth silently says "wow". Subconsciously your foot is tapping with the downbeat. We found myself melting into the chair, listening to an entire well-recorded album. The micro-details, when a singer pulls the microphone closer or further away, or a trumpeter aims the bell differently in the venue – are all evident. It's a captivating playback experience. There's "space" around and between the vocalists and instruments. The dynamics are uncompressed. Imaging remains tight and focused at all listening levels. The soundstage width and depth is the biggest of all amplifiers tested.

Tier 1

Sinfoni Prestigio

Without question, this is the classiest looking amplifier here. Fit and finish are absolutely flawless. The sound is warm, smooth, and transparent., with layered depth cues. Most notably, the highs were airy and lacked any fatigue after hours of enjoyment. If there are any flaws, it's that the Prestigio lacks the dynamics, and sheer output of the other top shelf amplifiers. This would be an ideal amplifier for smaller drivers and tweeters.

Should you want even more transparency and detail, you can have your Prestigio upgraded by Gordon Taylor @ The Amp Doctor. We were lucky to have both an unmodified and modified sample for direct comparison. Caps replaced with higher rated parts. Preamp OpAmps are upgraded as well. The original OpAmps were class leading in 1979, but not any more. A bias adjustment will complete the upgrade. It was unanimous - we strongly suggest the upgrades!

Tier 1

SoundDigital - $1600

Without a doubt, this amplifier is the most controversial of the collection. A few top scoring competitors, and soundoff Champions have shared this is their "secret weapon" to their success. These gentlemen have the means to obtain and use just about anything they want, including the usual suspects of "high end" amplifiers, and they choose to use the SD300.2D. If you saw the plastic-ended, 7" x 7" aluminum chassis next to the rest of these amplifiers, the juxtaposition would be striking. There are no heatsink fins. No fans. No gain controls. It's Class D. The disbelief is palpable. It defies all logic. Describing how dimensionally accurate, transparent, and dynamic this lightweight amplifier is with profound adjectives seems disingenuous, but I assure you, I'm no charlatan. This amplifier is legit!

Bonus Reviewed Amplifiers

These are no longer in production. The Amp Doctor – Gordon Taylor, has modified most of them with upgraded components and a bias adjustment. They represent what is possible, should you want to refurbish an old school design.

Adcom GFA-4702
Nelson Pass designed this amplifier about 25 years ago, as the statement piece for Adcom. It features a fully balanced, discrete Class A input section, followed by a Class A/B output section, rated at 70 x 2 @ 4 ohms. Real world power has been reported as more than double that. With the external power supply, and massive reserve capacitance on the rails, this amplifier is capable of explosive dynamics, and recovers from clipping gracefully (there's no ringing or harshness). It is among the very best 12V amplifiers *ever* built, and would be joining the Tier 1 amplifiers mentioned above.

Genesis Class A Monoblock
It's obvious Gordon Taylor is extremely passionate about his bespoke amplifiers. The sweet, lush sound of these amplifiers is captivating, and among the very best of the Tier 1 group.

Phoenix Gold MS-2250
Larry Frederick is well known in the 12V industry. The MS and MPS amplifiers were regarded among the best when they were introduced in 1990, featuring dual-mono, Triple Darlington designs. With its simple, elegant circuitry, and after cleaning up the preamp section, it's one of the most fun amplifiers to enjoy for hours on end. It would join the Tier 2 amplifiers.

Luxman CM-2100
Originally introduced in1999, Luxman equipped their CM-2100 their ODNF (Only Distortion Negative Feedback) method. It features the ability to bypass the preamp section in "direct" mode. Combined with balanced or unbalanced inputs, this is a *very* sweet sounding amplifier, and would be among the Tier 2 group.

Audison Trenta HV
Production began in 1995. This amp features balanced inputs, and the ability to bypass the preamp section. It's impressive power and lush delivery would place it among the Tier 2 amplifiers.

DR Coustic DR510
Richard Coe designed these amplifiers, which were produced by Kinergentice – a home audio manufacturer. These feature both balanced and unbalanced inputs. We were surprised at how well this *unmodified* old school amplifier sounds – simply brilliant! At only few hundred dollars, this amplifier unquestionably has the highest value of anything we've heard. We feel it is among the Tier 2 amplifiers.

Parting Thoughts

It has been an absolute pleasure to experience these amplifiers! Hopefully we can continue to do this every winter, and include more makes and models that weren't available for this session. Again, thank you to everyone who delivered amplifiers for us to enjoy. Obviously, an amplifier is only a part of the system. It is essential to have a source unit that provides a quality signal, and speakers that are capable of revealing the details. Of course, none of this is going to sound realistic in a vehicle without a solid installation, which includes making wise decisions about speaker locations and angles. Even with the best DSP, it is impossible to correct for a less-than-ideal install. Seek an installer that is familiar with vehicle acoustics, and building a top shelf system!